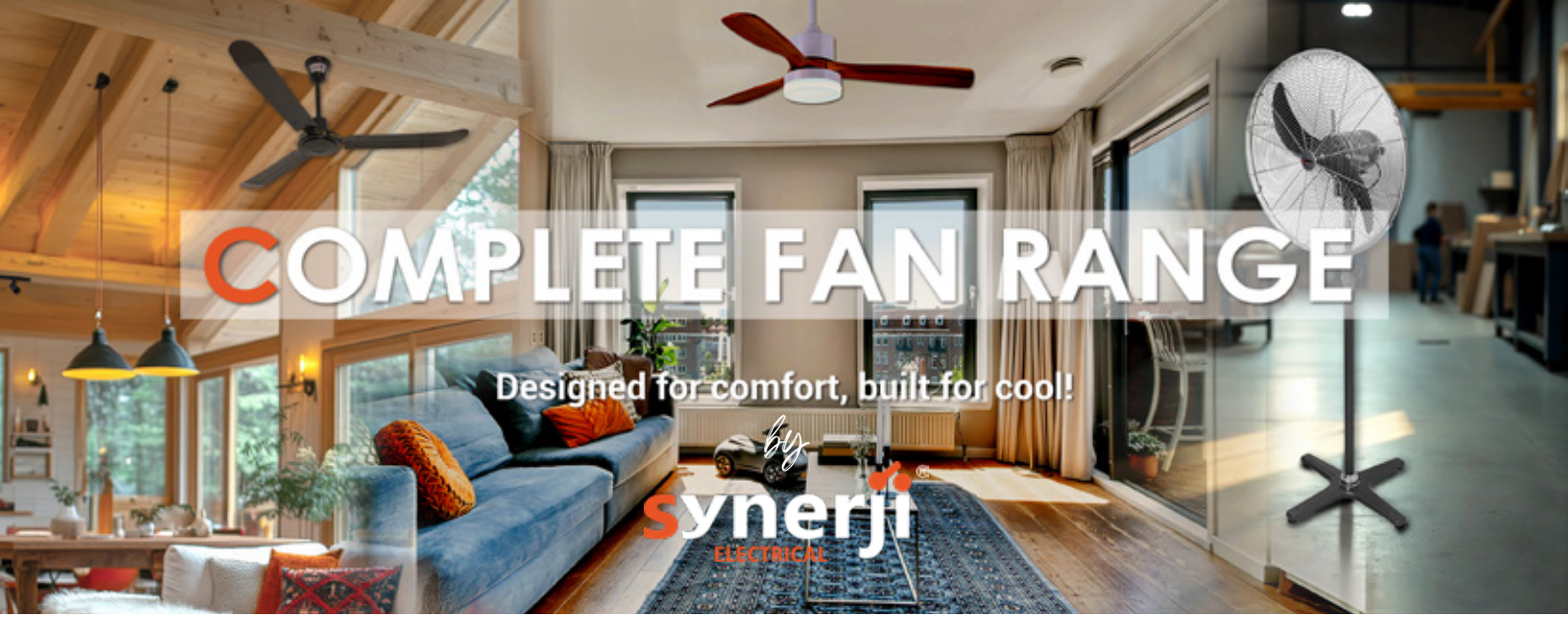

INDUSTRIAL FAN

FLOOR FANS

INTRODUCTION

The Synerji 2 Blade Industrial Wall Fan delivers strong, reliable airflow for demanding commercial and industrial environments. Its durable metal construction ensures long-lasting performance, while the robust motor and sturdy blades provide effective, consistent ventilation wherever required. A practical, space-saving solution ideal for workshops, warehouses, factories, and busy operational areas.

INDUSTRIAL WALL FAN
2 BLADE - 230W

SYF26W

WARRANTY 1 YEARS WARRANTY

Airflow (m³/H) : 205m³/min
Blades: 2 Blades
Material: Metal
Input Voltage: AC220V-50HZ
Power: 230W
RPM: 1400 Max
Diameter: Ø720mm

DIMENSIONS

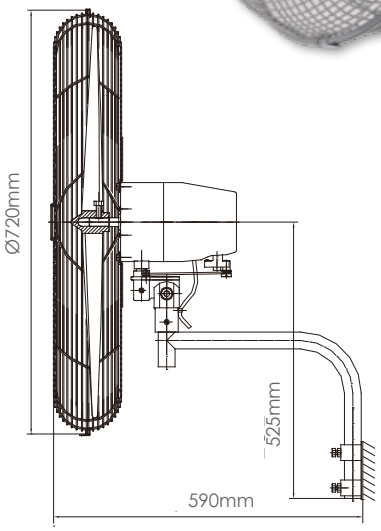

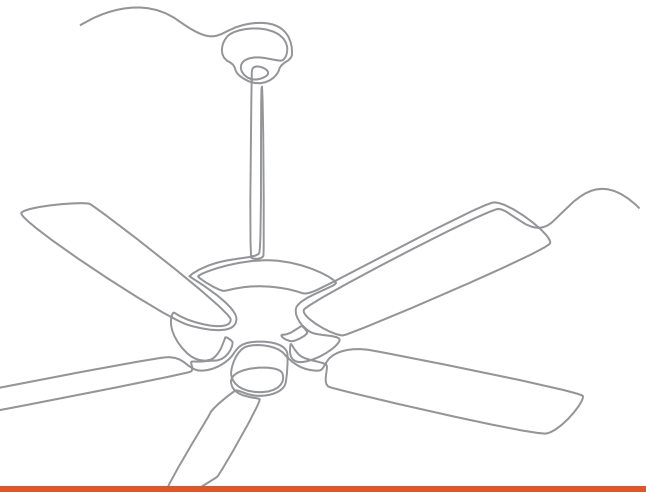

NB - To be installed by a qualified electrician.